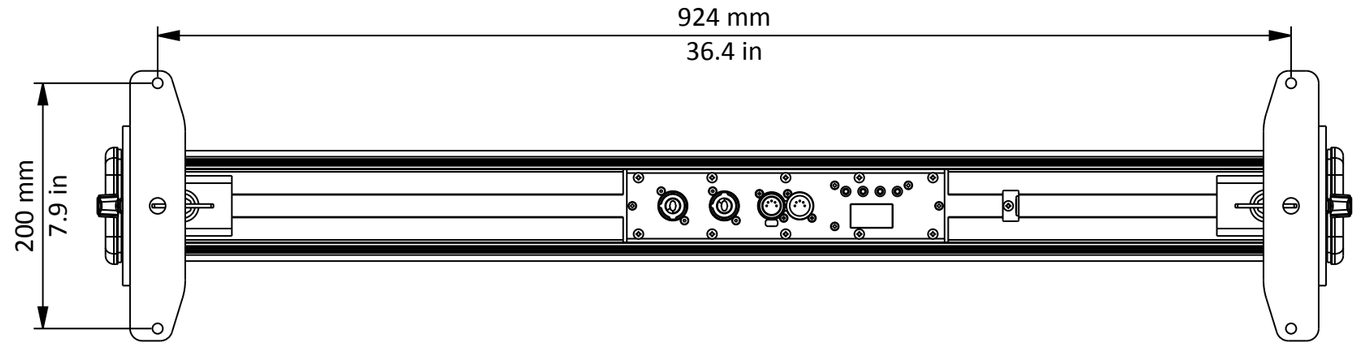
924 mm
36.4 in
200 mm
7.9 in

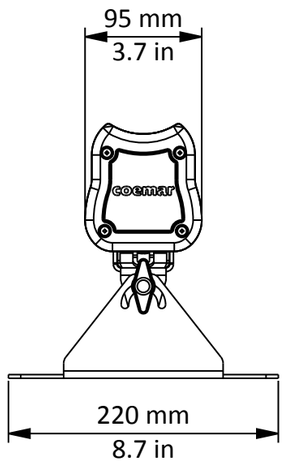
95 mm
3.7 in
220 mm
8.7 in

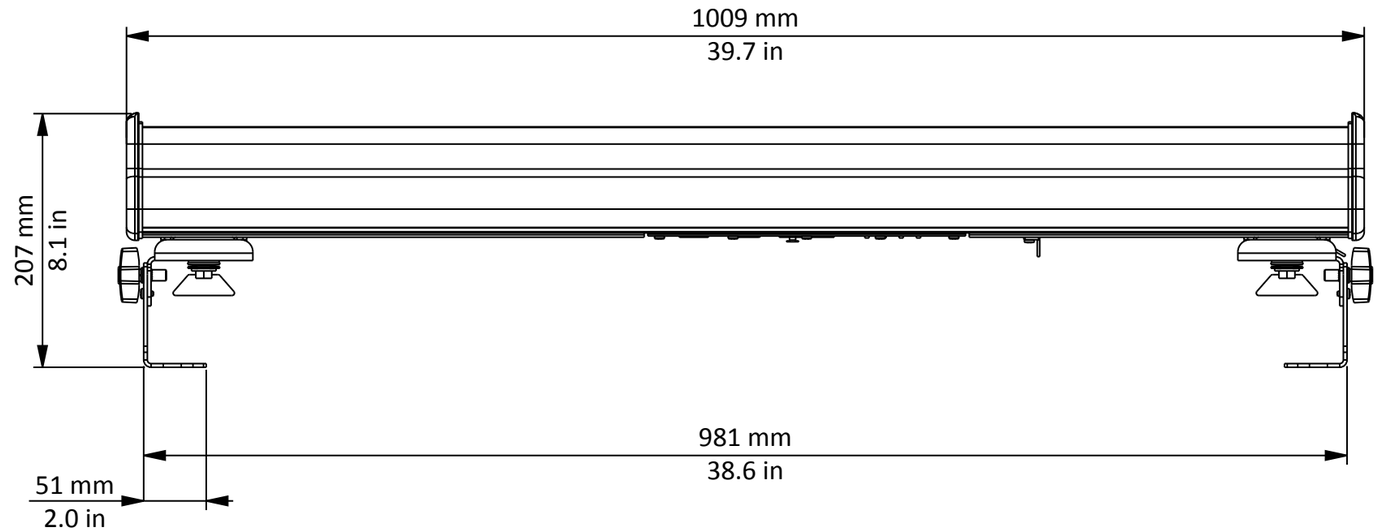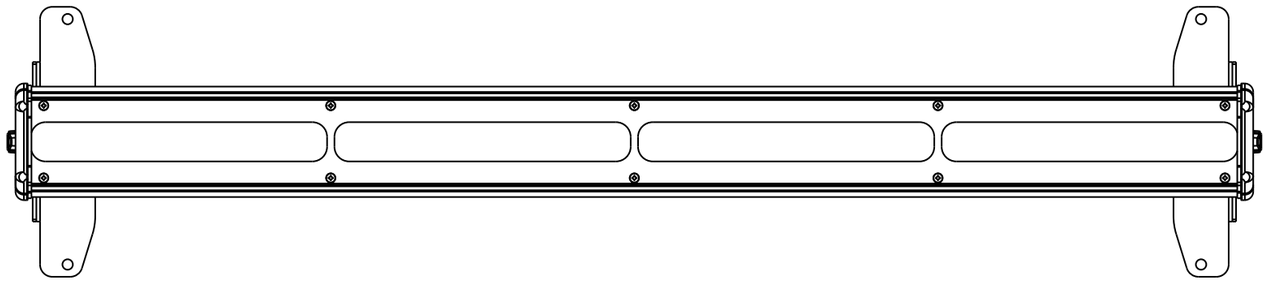
1009 mm
39.7 in
207 mm
8.1 in
981 mm
38.6 in
51 mm
2.0 in